ME812u, ME812u-E, ME812u-LGR Router/Controller

Powerful Multi-Equipment Controllers

The ME812u series of controllers have the speed, power, memory and I/O flexibility to handle the most demanding control applications in the industry. Capable of controlling multiple pieces of HV-ac equipment simultaneously, this robust BACnet controller can support complex control strategies with plenty of memory for trends, and is capable of third party integration using other communication protocols.

Key Features and Benefits

- Multi-equipment capabilities for general and custom HV-ac applications.
- Native BACnet communications to field devices over TCP/IP, Ethernet, high-speed ARCNET 156 Kbps or BACnet MS/TP networks.
- Universal Inputs and Outputs with Hand-Off-Auto override.
- Flexible communication port configurations are available for communications to field controllers and routing to other BACnet and non-BACnet devices.
- Easy third-party integration using Automated Logic's extensive library of integration drivers.
- Easy expansion of I/O using up to five MEx I/O expansion modules in a stack panel configuration or remote mounted up to 100ft away for scalable solutions.
- First MEx I/O expander can be mounted directly on top of the ME812u controller, reducing control panel space.
- 16 MByte of battery backed SDRAM memory for control and extensive trending, providing plant diagnostics and historical reports.
- 8 MByte Flash memory (32 bit wide) for easy field upgrades over the network.
- Battery backed real-time clock provides true standalone capabilities allowing complete recovery from power outages.
- Rnet port supports Automated Logic's line of RS room sensors and BAC*view*6 local operator interface, and provides local access to the system.
- ME812u controllers are fully graphically programmable and offer full peer-to-peer communications with other ME line, SE line or ZN line controllers. Graphical programs are universally understood and provide self-documenting control sequences.
- Tough construction delivers superior performance and reliability. Modules are constructed with a rugged aluminum cover which provides optimum electrical protection and noise immunity.

AUTOMATEDLOGIC®
CORPORATION

1150 Roberts Boulevard
Kennesaw, Georgia 30144
770/429-3000
Fax 770/429-3001
www.automatedlogic.com

ME812u, ME812u-E, ME812u-LGR Router/Controller

Specifications

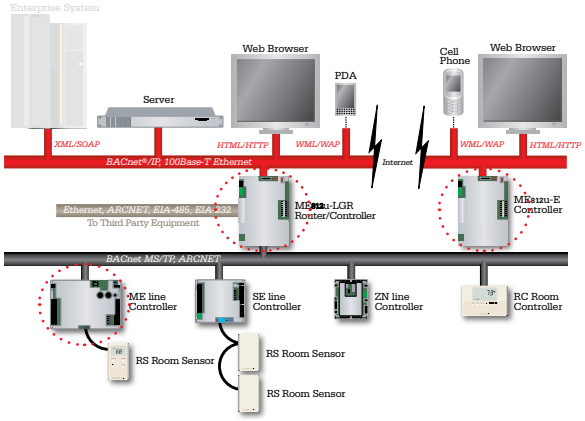

BACnet Support:	Conforms to the BACnet Advanced Application Controller (B-AAC) Standard Device as defined in BACnet 135-2001 Annex L.
Communication Ports:	ME812u: EIA-485 port for ARCNET 156 Kbps or BACnet MS/Tp (9600 baud to 76.8 Kbps). Rnet port for RS room sensors and local BAC*view*6 operator displays. Xnet (500 Kbps) port for MEx I/O expansion modules. Local access port. ME812u-E: Ethernet port (10/100Mbps) only for BACnet/IP communications. Rnet port for RS room sensors and local BAC*view*6 operator displays. Xnet (500Kbps) port for MEx I/O expansion modules. Local access port. ME812u-LGR: Ethernet port* (10/100Mbps) for BACnet over Ethernet or BACnet/IP communications. EIA-485 port for ARCNET 156 Kbps or BACnet MS/TP (9600 baud to 76.8 Kbps). EIA-232/485* configurable port for BACnet PTP. Rnet port for RS room sensors and local BAC*view*6 operator displays. Xnet (500 Kbps) port for MEx I/O expansion modules. Local access port. **Third-Party integration drivers available through Ethernet and (1) EIA-232/485 configurable port.*
Universal Inputs:	Twelve configurable universal inputs with 14-bit A/D resolution. Supported input types include: 0-5 V-dc, 0-10 V-dc, 0-20 mA, Thermistor (10k Ohm Type II), 1k Ohm RTD (Platinum, Nickel or Balco), and Dry Contact. All inputs support pulse counting up to 40 cycles per second (25mSec minimum pulse).
Universal Outputs:	Eight universal outputs that are jumper configurable as 0-10V-dc, or 0-20mAdc with 12-bit A/D or 24V-dc @ 50mA relay drive. HOA (hand/off/auto) switches for all outputs, including potentiometer for manual adjustment of analog outputs.
Expansion:	Five MEx I/O expansion modules can be connected - one mounted directly on top of the controller, mounted locally in a stack configuration or remote mounted up to 100ft away. Compatible with legacy MX I/O expanders using the 9-pin Sub-D connector only.
Microprocessor:	Powerful 32-bit Motorola Power PC microprocessor. High performance 32-bit communication co-processor. I/O expansion CAN co-processor.
Memory:	32-bit memory bus structure, 8 Mbyte FLASH memory, 16 Mbyte SDRAM battery backed. Battery CR123A has life of 10 years with 720 hours of cumulative power outage.
Real-time Clock:	Battery-backed real-time clock.
Status Indicators:	LED status indicators for EIA-232/485 communication, and low battery status. Seven segment status display for running, error, and power status.
Module Addressing:	Rotary dip switches for intuitive network addressing of modules.
Protection:	Built-in surge and transient protection circuitry for power, communications and I/O.
Listed by:	UL916 (Canadian Std C22.2 No. 205-M1983), CE, FCC Part 15 - Subpart B - Class A.
Environmental Operating Range:	-20ºF to 140ºF (-29ºC to 60ºC); 10 to 90% relative humidity, non-condensing.
Power Requirements:	24 V-ac ± 10%, 50-60Hz, 50VA, or 26 V-dc ± 10%, 23W. NOTE: Power consumption will increase when BAC*view*6 or other accessories are attached.
Physical:	Rugged aluminum cover. Removable screw terminal blocks.
Weight:	1.4 lb. (0.635 kg)

Dimensions:

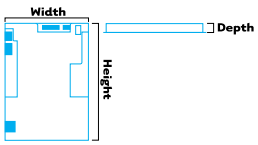

Overall
Width: 7-1/2" (190mm)
Height: 11-5/16" (287mm)
Depth: 1-1/4" (32mm) min. panel depth

Mounting Holes
Width: 5" (127mm)
Height: 10-7/8" (276mm)

Automated Logic Corporation . 1150 Roberts Boulevard . Kennesaw, Georgia 30144 . 770/429-3000 . Fax 770/429-3001 . www.automatedlogic.com

© 2007, Automated Logic Corporation. Automated Logic, the Automated Logic logo and WebCTRL are registered trademarks of Automated Logic Corporation. BACnet is a registered trademark of ASHRAE. All other trademarks are the property of their respective owners. Specifications are subject to change without prior notice.

CSME812urev6